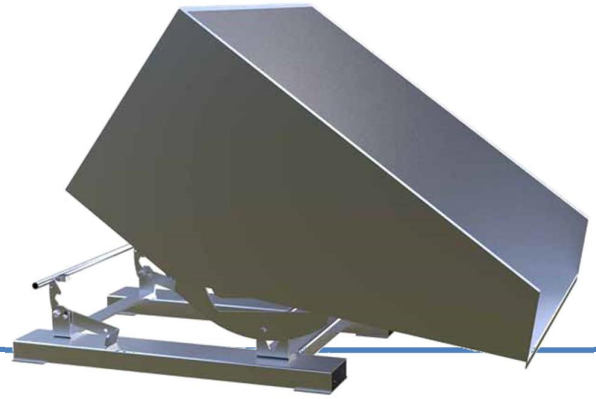

Roll Forward Skips (Stainless Steel)

Our Roll Forward Skips manufactured entirely from stainless steel, making them ideal for use in the food and drinks industry, where corrosion resistance and the minimisation of contamination is vital.

Supplied with full length release handles, accessible from either side; this eliminates the need to lean dangerously over the skip to activate it. Drilled castor plates allow for retro-fitment if required

Every part of this skip is manufactured from stainless steel, making them suitable for pressure washing or steam cleaning

Model Ref	Weight	C of G Min	C of G Max	Load Centre
RFS 25L-SS	119kg	818mm	595mm	575mm
RFS 40L-SS	133kg	899mm	679mm	679mm
RFS 80L-SS	173kg	1042mm	735mm	735mm
RFS 120L-SS	206kg	1145mm	835mm	835mm
RFS 160L-SS	228kg	1178mm	835mm	835mm
RFS 200L-SS	256kg	1181mm	835mm	835mm

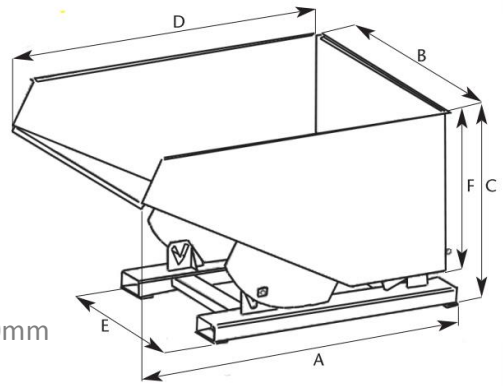

Max Fork Size 150 x 60mm

Model Ref	Volume	Capacity	A	B	C	D	E	F
RFS 25L-SS	0.25m³	1000kg	1148mm	794mm	696mm	1025mm	890mm	547mm
RFS 40L-SS	0.40m³	1000kg	794mm	794mm	776mm	1197mm	890mm	547mm
RFS 80L-SS	0.80m³	1000kg	1710mm	900mm	982mm	1540mm	890mm	750mm
RFS 120L-SS	1.20m³	1250kg	1710mm	1300mm	982mm	1540mm	890mm	750mm
RFS 160L-SS	1.60m³	1250kg	1710mm	1700mm	982mm	1540mm	890mm	750mm
RFS 200L-SS	2.00m³	1500kg	1710mm	2125mm	982mm	1540mm	890mm	750mm

Due to the 'spark proof' properties of these fully stainless steel skips, these skips are also suitable for use in potentially hazardous areas and explosive atmospheres. The skips can come ATEX certified to the EU Directive 94/9/EC